Centrecon Series

MEQ Pole with MAE Double Arm

Medium Embedded Square Pole with Aluminum Elliptical Arm

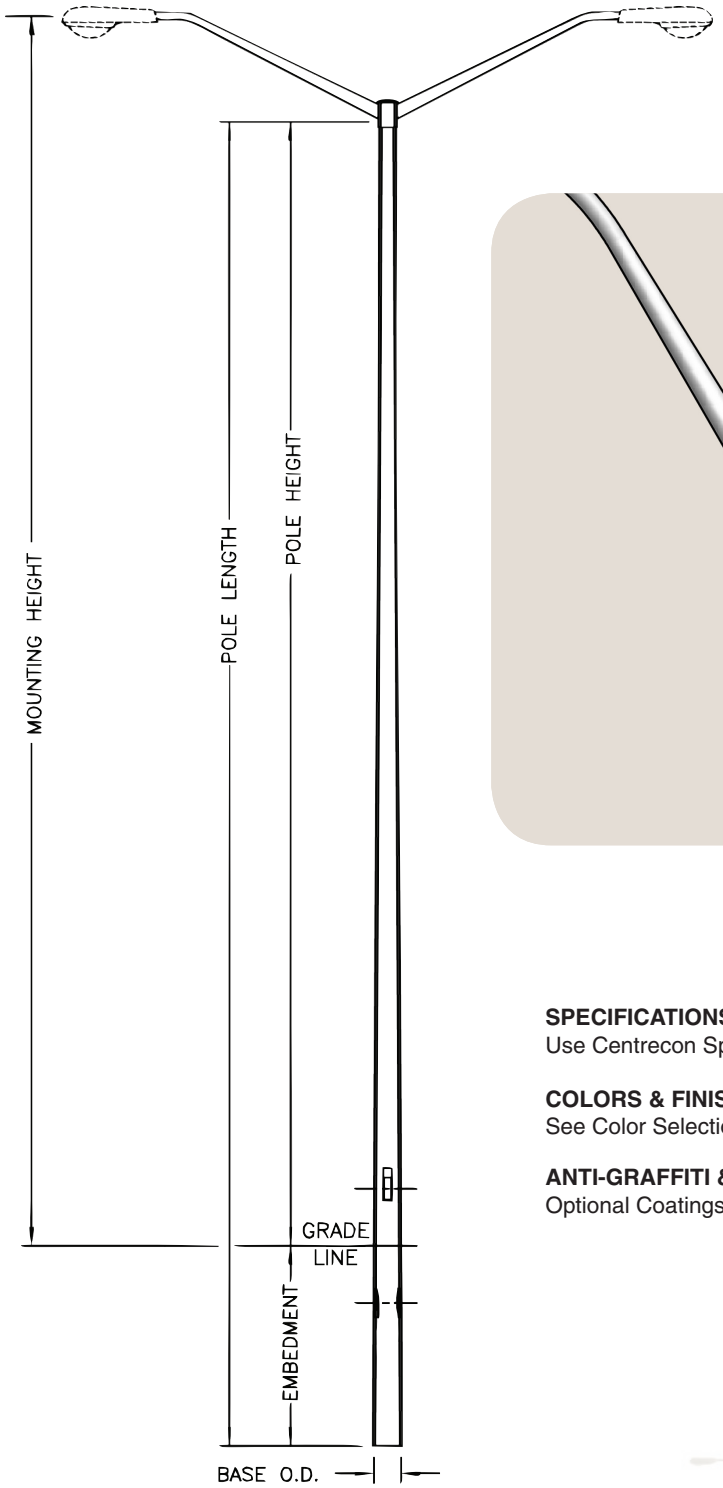

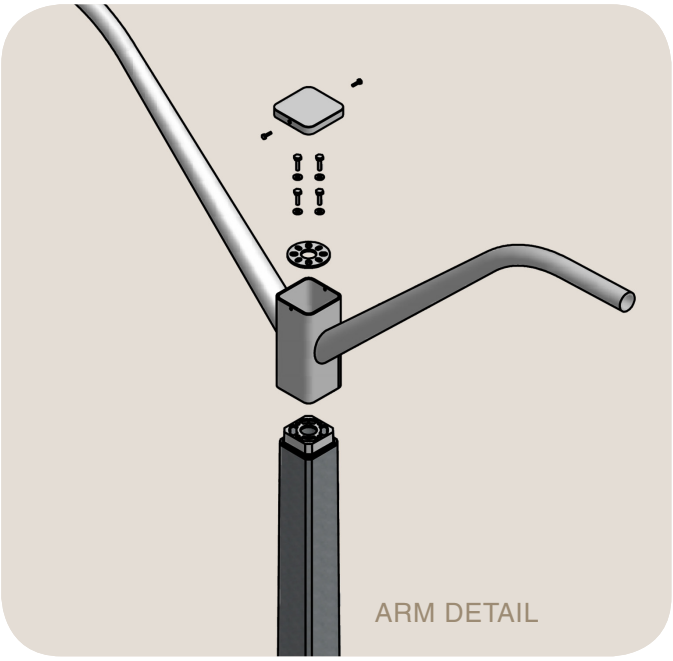

SPECIFICATIONS
Use Centrecon Specifications.

COLORS & FINISHES
See Color Selection Guide.

ANTI-GRAFFITI & SEALER
Optional Coatings available for added protection.

Manufacturer reserves the right to alter the product design without prior notice. Consult Ameron or authorized representative for additional information.

MEQ Pole with MAE Double Arm Combinations

Pole & Arm Configuration Includes Finish Code	Mounting Height	Pole Height	Base OD	Embedded Depth	Pole Length	Arm Length	Max. 50 lb. Luminaire EPA at 90 mph.	Pole Weight
MEQ06*113A-MAE4DUN	**22'-7"**	19'-8"	8-1/16"	4'-11"	24'-7"	4'	6.3 sq. ft.	1,150 lbs.
MEQ06*113A-MAE6DUN	**22'-7"**	19'-8"	8-1/16"	4'-11"	24'-7"	6'	4.0 sq. ft.	1,150 lbs.
MEQ06*113A-MAE8DUN	**22'-7"**	19'-8"	8-1/16"	4'-11"	24'-7"	8'	2.4 sq. ft.	1,150 lbs.
MEQ07*113A-MAE4DUN	**25'-11"**	23'-0"	8-3/8"	4'-11"	27'-11"	4'	6.3 sq. ft.	1,250 lbs.
MEQ07*113A-MAE6DUN	**25'-11"**	23'-0"	8-3/8"	4'-11"	27'-11"	6'	4.0 sq. ft.	1,250 lbs.
MEQ07*113A-MAE8DUN	**25'-11"**	23'-0"	8-3/8"	4'-11"	27'-11"	8'	2.4 sq. ft.	1,250 lbs.
MEQ07.5*113A-MAE4DUN	**27'-6"**	24'-7"	8-9/16"	4'-11"	29'-6"	4'	6.3 sq. ft.	1,350 lbs.
MEQ07.5*113A-MAE6DUN	**27'-6"**	24'-7"	8-9/16"	4'-11"	29'-6"	6'	4.0 sq. ft.	1,350 lbs.
MEQ07.5*113A-MAE8DUN	**27'-6"**	24'-7"	8-9/16"	4'-11"	29'-6"	8'	2.4 sq. ft.	1,350 lbs.
MEQ08.5*113A-MAE4DUN	**30'-10"**	27'-11"	9"	4'-11"	32'-10"	4'	6.1 sq. ft.	1,570 lbs..
MEQ08.5*113A-MAE6DUN	**30'-10"**	27'-11"	9"	4'-11"	32'-10"	6'	3.8 sq. ft.	1,570 lbs.
MEQ08.5*113A-MAE8DUN	**30'-10"**	27'-11"	9"	4'-11"	32'-10"	8'	2.3 sq. ft.	1,570 lbs.
MEQX09.4*113A-MAE4DUN	**33'-9"**	30'-10"	9-1/4"	5'-3"	36'-1"	4'	6.1 sq. ft.	1,775 lbs.
MEQX09.4*113A-MAE6DUN	**33'-9"**	30'-10"	9-1/4"	5'-3"	36'-1"	6'	3.8 sq. ft.	1,775 lbs.
MEQX09.4*113A-MAE8DUN	**33'-9"**	30'-10"	9-1/4"	5'-3"	36'-1"	8'	2.3 sq. ft.	1,775 lbs.
MEQX10.6*113A-MAE4DUN	**37'-8"**	34'-9"	9-7/8"	5'-3"	40'-0"	4'	6.1 sq. ft.	2,050 lbs.
MEQX10.6*113A-MAE6DUN	**37'-8"**	34'-9"	9-7/8"	5'-3"	40'-0"	6'	3.8 sq. ft.	2,050 lbs.
MEQX10.6*113A-MAE8DUN	**37'-8"**	34'-9"	9-7/8"	5'-3"	40'-0"	8'	2.1sq. ft.	2,050 lbs.
MEQX12.2*113A-MAE4DUN	**42'-11"**	40'-0"	11"	9'-3"	49'-3"	4'	6.0 sq. ft.	2,760 lbs.
MEQX12.2*113A-MAE6DUN	**42'-11"**	40'-0"	11"	9'-3"	49'-3"	6'	3.6 sq. ft.	2,760 lbs.
MEQX12.2*113A-MAE8DUN	**42'-11"**	40'-0"	11"	9'-3"	49'-3"	8'	2.0 sq. ft.	2,760 lbs.
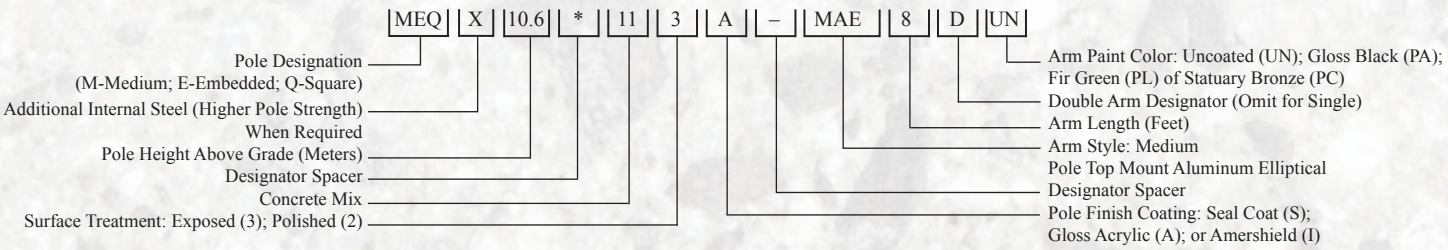
Pole & Arm Designator Layout